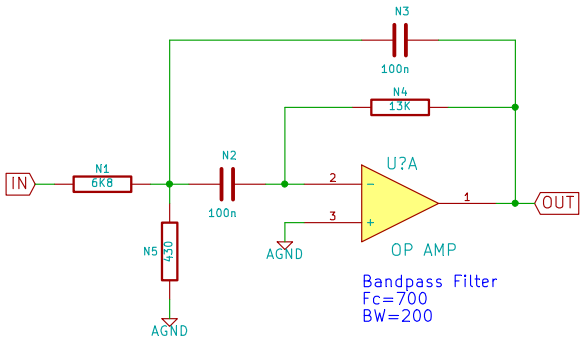

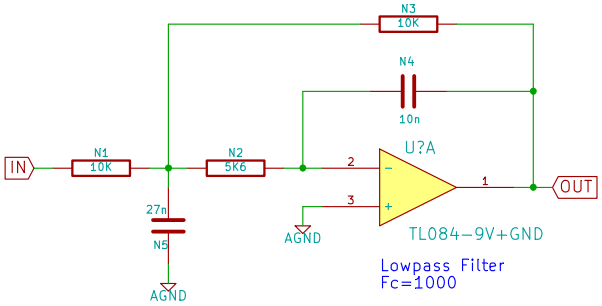

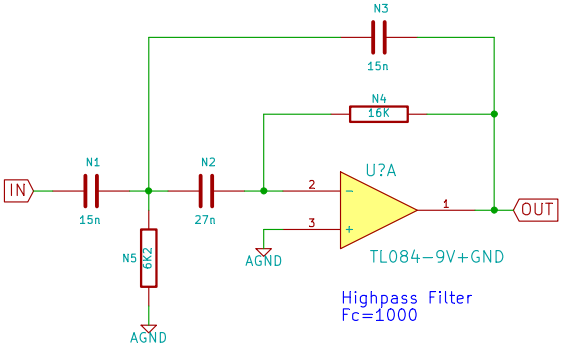

File: CALF-Misc.sch		
Sheet: /		
Title:		
Size: A4	Date: 28 sep 2014	**Rev:**
KiCad E.D.A. eeschema (2013-07-07 BZR 4022)-stable		Id: 1/1

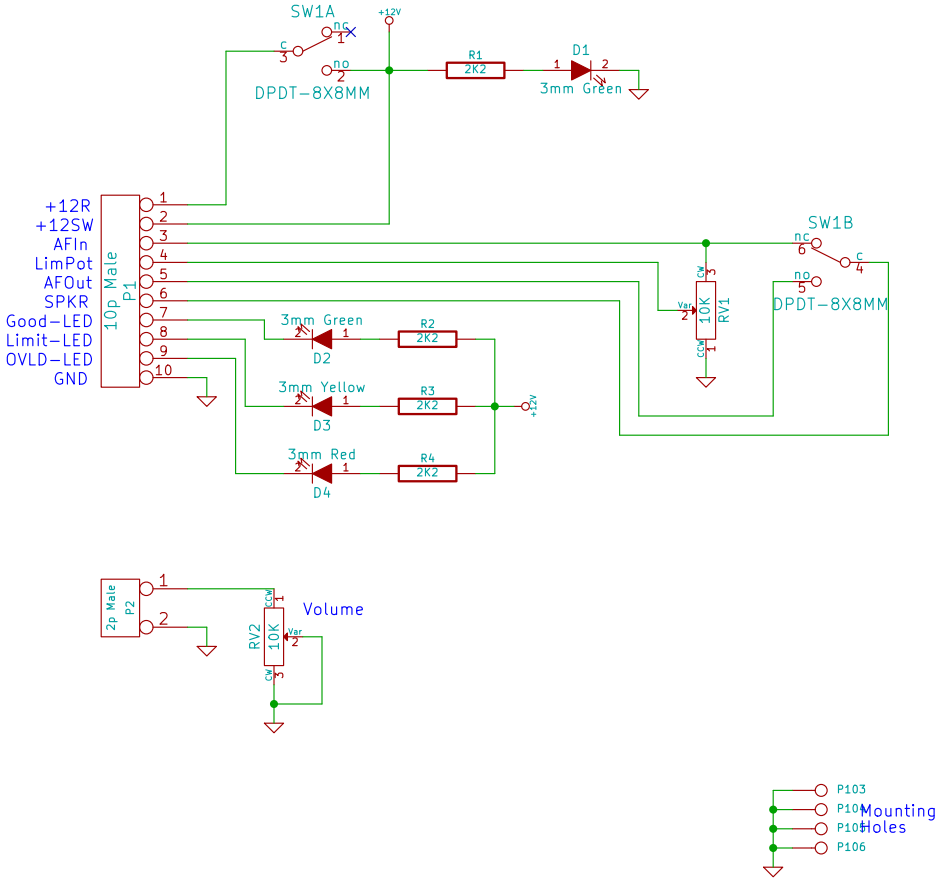

jwC kc9on	
File: CALF-Front.sch Sheet: /	
Title: CALF Front Panel	
Size: USLetter Date: 20 dec 2014	Rev: 2
KiCad E.D.A.	Id: 1/1

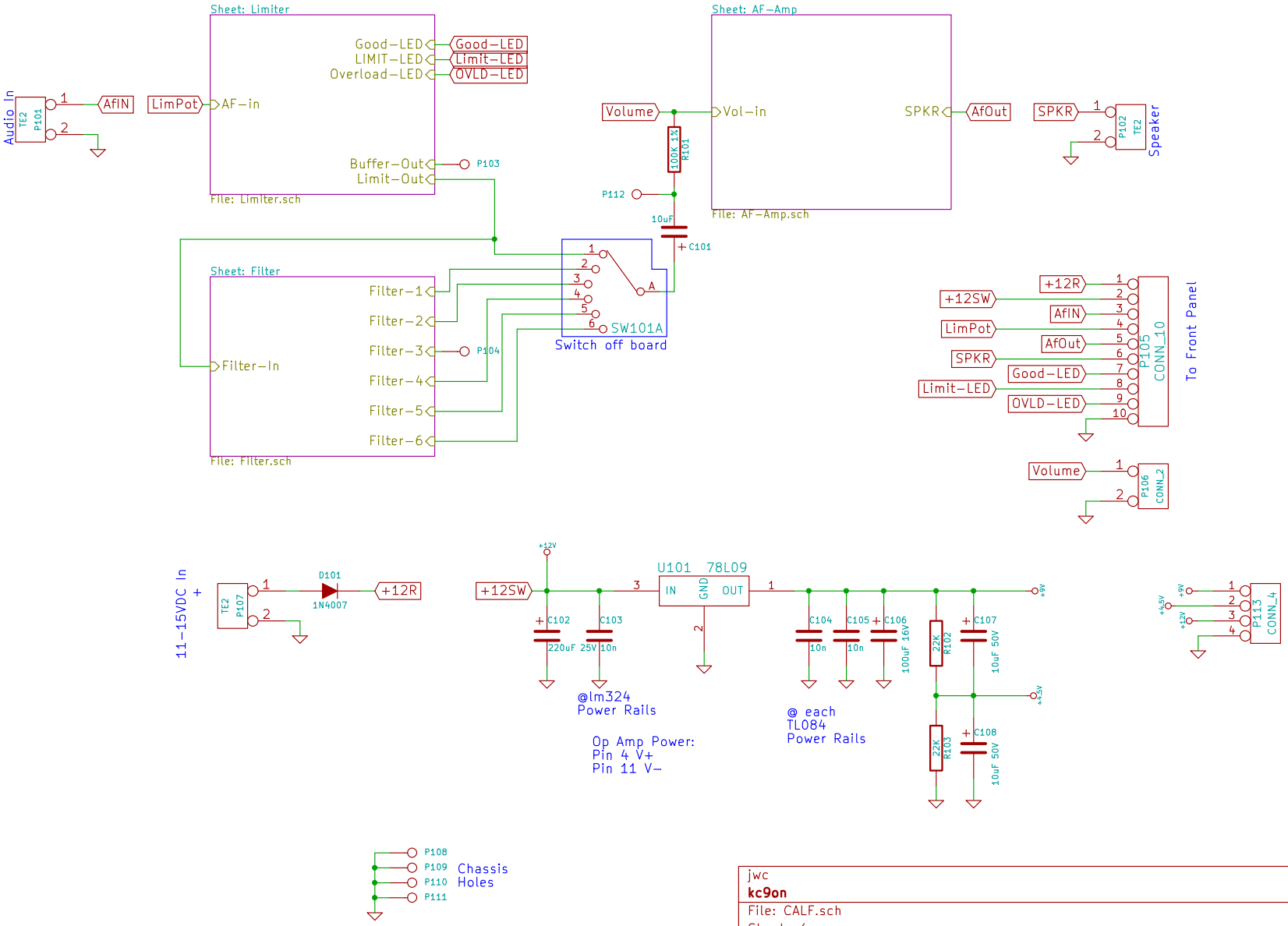

jwc	
kc9on	
File: CALF.sch	
Sheet: /	
Title: CALF CW Audio Limiter Filter	
Size: USLetter Date: 27 may 2015	**Rev: 2**
KiCad E.D.A. eeschema (2013-07-07 BZR 4022)-stable	Id: 1/4

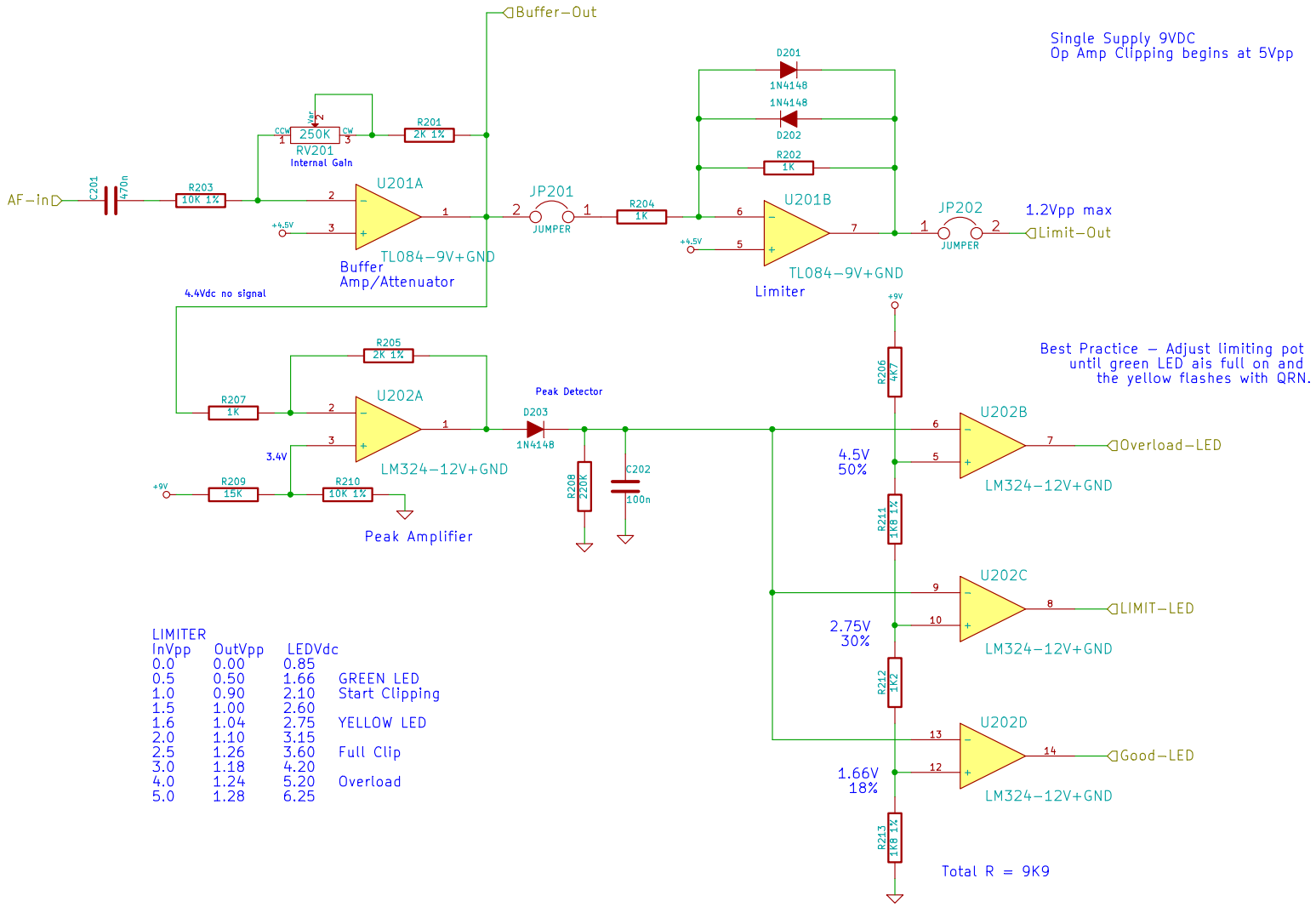

LIMITER

InVpp	OutVpp	LEDVdc	
0.0	0.00	0.85	
0.5	0.50	1.66	GREEN LED
1.0	0.90	2.10	Start Clipping
1.5	1.00	2.60	
1.6	1.04	2.75	YELLOW LED
2.0	1.10	3.15	
2.5	1.26	3.60	Full Clip
3.0	1.18	4.20	
4.0	1.24	5.20	Overload
5.0	1.28	6.25	

jwc
kc9on
File: Limiter.sch
Sheet: /Limiter/
Title: CALF CW Audio Limiter Filter
Size: USLetter Date: 27 may 2015 **Rev: 2**
KiCad E.D.A. eeschema (2013-07-07 BZR 4022)-stable Id: 2/4

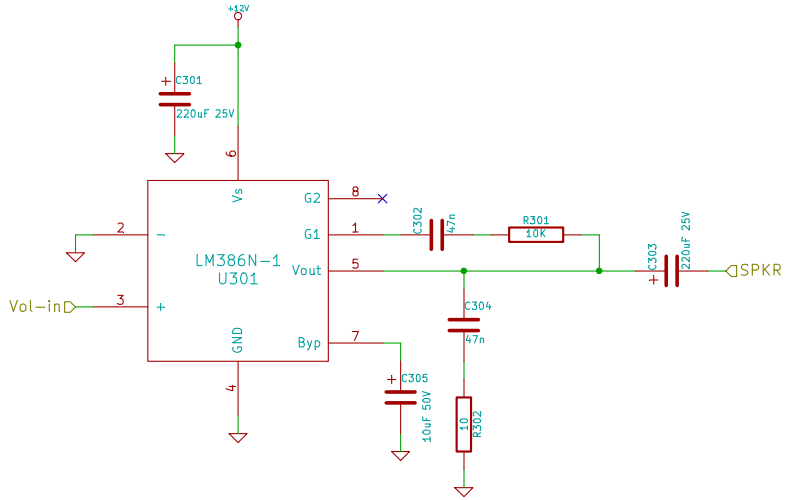

jwc		
kc9on		
File: AF-Amp.sch		
Sheet: /AF-Amp/		
Title: CALF CW Audio Limiter Filter		
Size: A4	Date: 27 may 2015	**Rev: 2**
KiCad E.D.A. eeschema (2013-07-07 BZR 4022)-stable		Id: 3/4

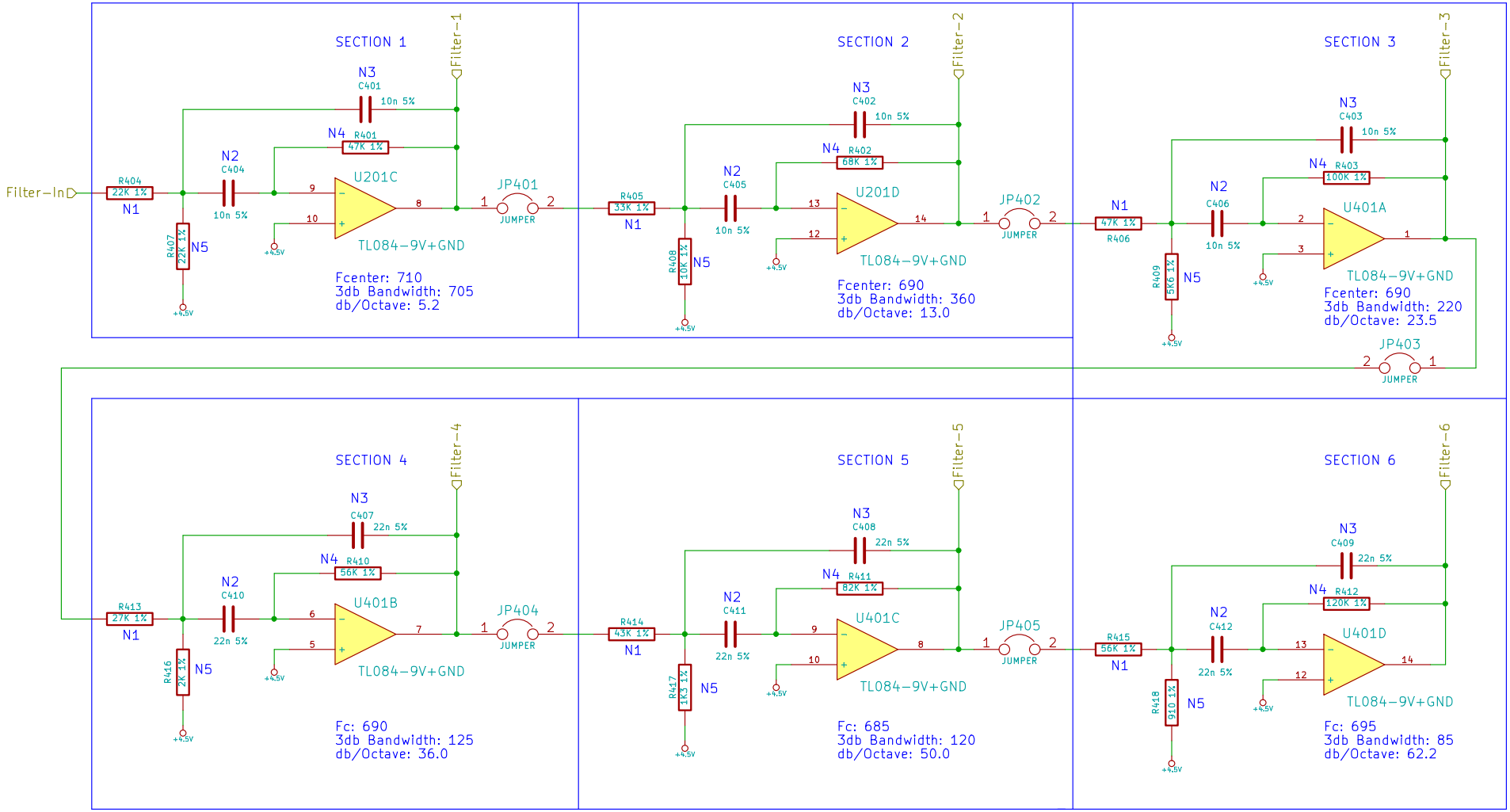

jwc	
kc9on	
File: Filter.sch	
Sheet: /Filter/	
Title: CALF CW Audio Limiter Filter	
Size: USLetter Date: 27 may 2015	**Rev: 2**
KiCad E.D.A. eeschema (2013-07-07 BZR 4022)-stable	Id: 4/4

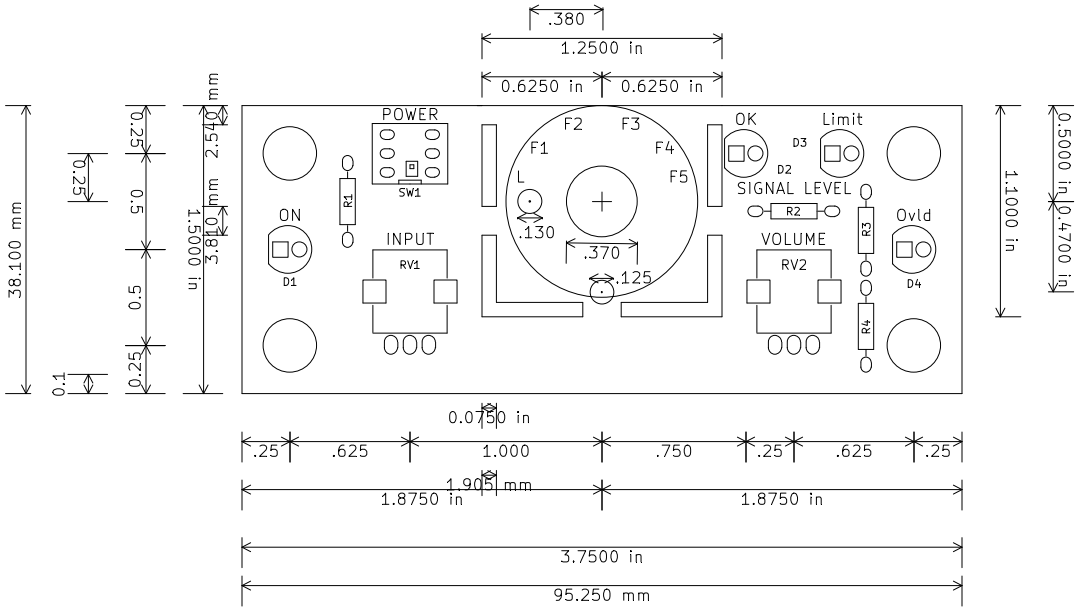

jwc kc9on	
File: CALF-Front.kicad_pcb Sheet: 1/1	
Title: CALF Front	
Size: USLetter Date:	Rev: 2
KiCad E.D.A. pcbnew (2013-07-07 BZR 4022)-stable	Id: 1/1

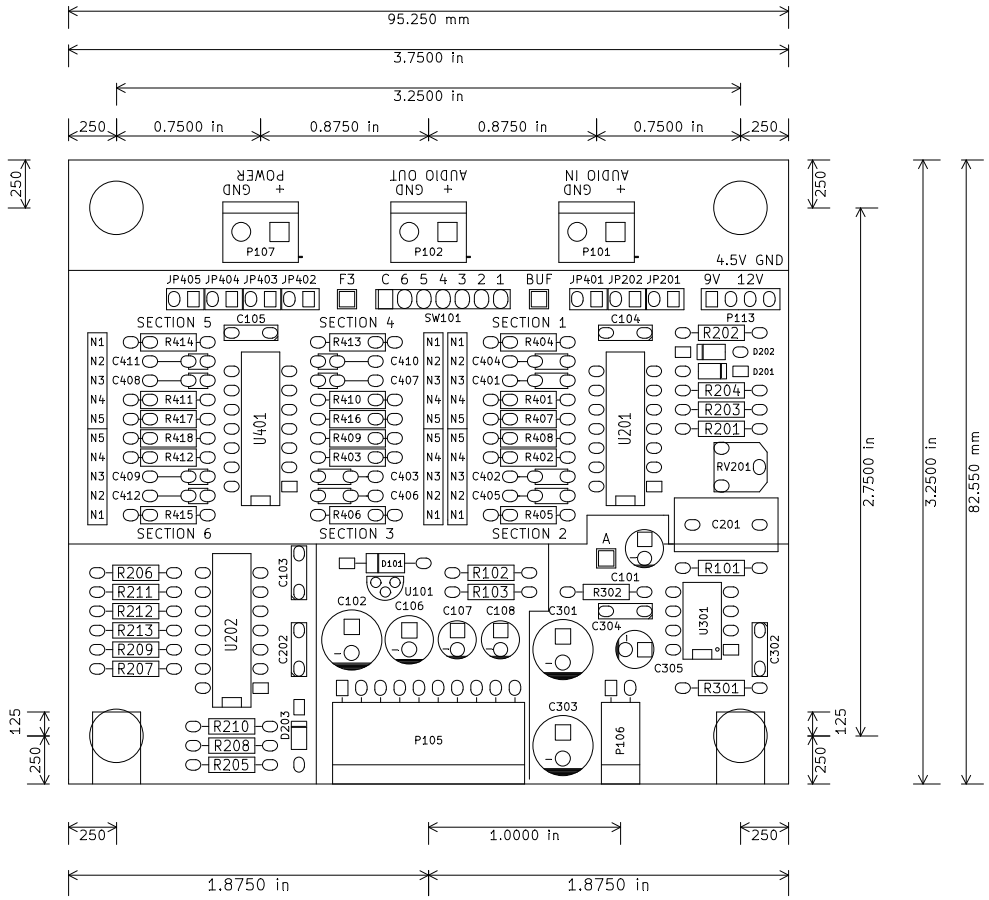

jwc kc9on	
File: CALF.kicad_pcb Sheet: 1/1	
Title: CALF Main	
Size: USLetter Date: 10 feb 2015	Rev: 2
KiCad E.D.A. pcbnew (2013-07-07 BZR 4022)-stable	Id: 1/1