CALF – CW Audio Limiter Filter
Assembly Instructions

CALF – the CW Audio Limiter Filter – Combines an audio limiter circuit along with up to 6 stages of bandpass filtering to aid in SSB/SWL and CW receiving. Filtering bandwidth ranges from 700Hz to less than 100Hz while the limiter circuit can be used to reduce large static crashes or aid in weak signal reception. A special thanks to Glen, KK4LPG, for your encouragement and guidance to help make this project a reality.

Features:

- Limiter helps to reduce crashes from QRN or can aid in weak signal reception
- 6 stages of Op Amp filtering, 5 switch selectable, offering various bandwidths from 700-100Hz on a 700Hz center frequency
- Built in 1W Audio amplifier drives headphones or a small speaker
- Controls mounted on a front panel PCB for ease of use
- Experimental options:
  - Stages can be split and re-arranged via jumper blocks – Want to put the limiter in the middle of the filter stages? No problem!
  - Optional IC Sockets are included to change and experiment with different R/C values and filter modes – Make Bandpass, Lowpass or Highpass filter stages!

This kit was designed using through hole components and enlarged PCB solder pads for ease of assembly. Included with the kit are several components such as stand-offs, plugs, and jacks to complete the project. Just add your own case!

The following tools are recommended:

Pencil type soldering iron and solder.
Needle nose pliers, small surgical clamps, small vice, Wire cutters/strippers, exacto knife
Magnifier Glass (optional but helpful)
Slotted screwdrivers
Scrap wire – 1 small piece approximately 2-3", just about any guage from 22-30 will work.
Digital Multi-Meter (DMM) – Highly Recommended to test 1% resistor values!
Oscilloscope & AF Signal generator (optional)
Power Source/supply 12-15V
Small Rotary Tool or Jewelers saw (optional for case installation)

Construction notes:

- Familiarize yourself with components using the included parts list.

  TIP: Not sure what part is what? The following sources have great articles on component identification and building techniques.
  - Almost any copy of the ARRL Handbook published within the last 25 years.
  - The GQRP web site: http://www.gqrp.com/databook.htm
- All parts are mounted on the top side of the PCB ***except*** headers P1 and P2 on the front panel PCB.
- Solder and trim the excess leads after installing each component.

©2014 kc9on

CALF – CW Audio Limiter Filter
Assembly Instructions

TIP: Not sure how to solder? There are many excellent videos on the internet. Check out sites such as Sparkfun.com, adafruit.com, and electronics123.com.

- Parts of better quality may be substituted in a few cases. For example a 1K 5% resistor (Brown-Black-Red-Gold) may be substituted with a 2% (Brown-Black-Red-Red). We have tried to note this in the parts list.
- **5 band 1% resistors can be a little confusing to read at times.** It's recommended to measure them with a DMM before soldering in place. For example this kit has a 100K resistors (brown-black-black-orange-brown) which looks similar to the 1.3K resistor (brown-orange-black-brown-brown).
- Ceramic capacitors may be either the traditional "brown" disc type or monolithic "yellow" variety.
- Mylar capacitors are typically larger, rectangular, and green in color. These devices usually have a better tolerance (5%) than ceramic types.
- Observe polarity when installing electrolytic capacitors. The square pad is the positive(+) lead and the round/oval pad is the negative(–) lead. Additionally we have also placed a minus(-) near the negative pad. You may also notice an extra white area on the silkscreen outline which matches up with the negative stripe on most electrolytic capacitors.

©2014 kc9on

CALF – CW Audio Limiter Filter
Assembly Instructions

Front Panel Assembly

1. **DESICISION**: If you plan on mounting the completed unit in a chassis, you may wish to remove the switch mounting area from the front panel PCB in order to obtain more of the switch shaft on the outside of the chassis. To do this remove the 5 areas holding this section in place using a dremel tool or small jewelers type saw. This may also be done after assembly, however, you will have dust and debris from the cutting on the circuit board as well as taking extra care not to damage components soldered on the board.

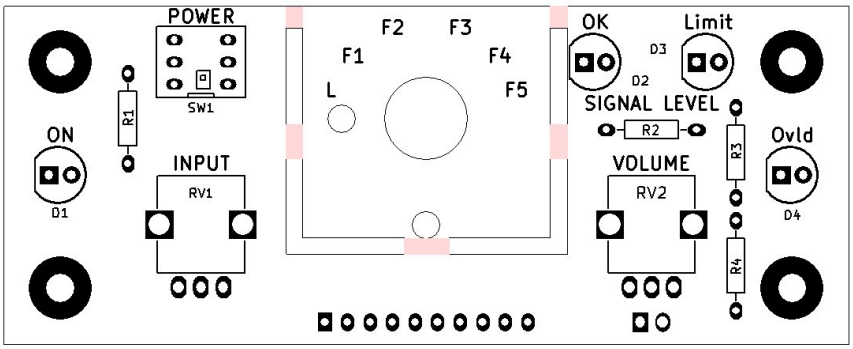

2. ( ) Install the 10 pin header P1 and 2 pin header P2 on the OPPOSITE side of the board. When soldering try to keep the headers as perpendicular to the board as possible.

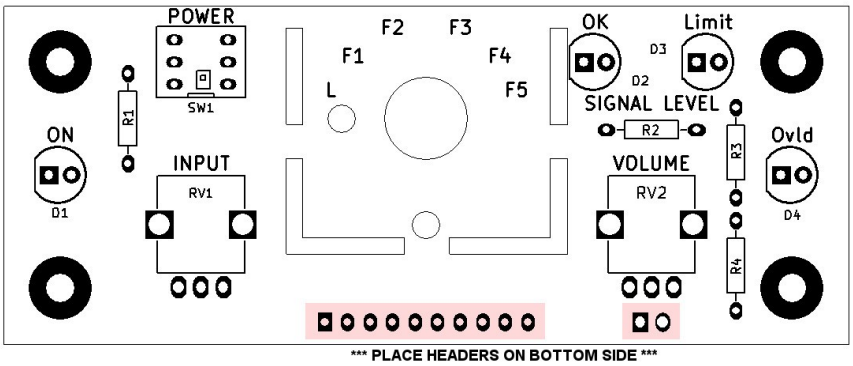

©2014 kc9on

CALF – CW Audio Limiter Filter
Assembly Instructions

3. Install the 4 2.2K (Red-Red-Red-Gold) resistors at R1, R2, R3, and R4.

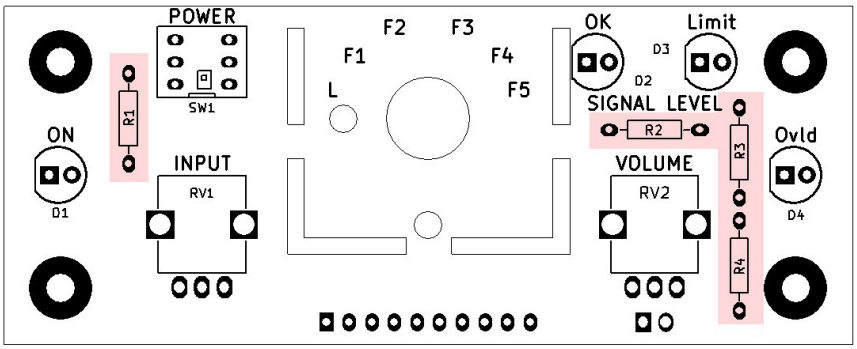

4. ( ) Install the pushbutton switch at SW1. The switch can be installed in either direction.

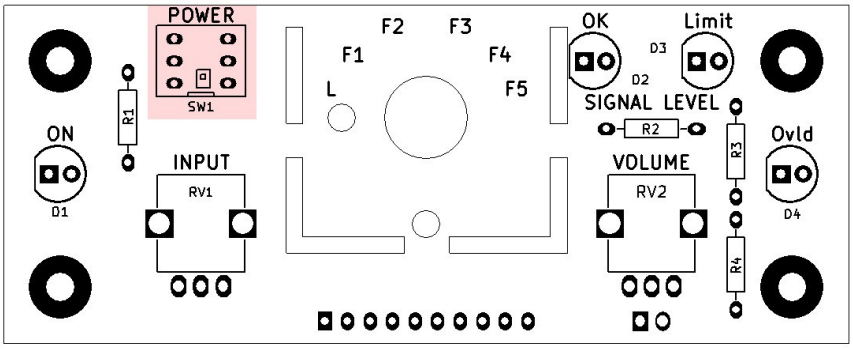

5. ( ) Install the 2 potentiometers at RV1 and RV2. Do not fill the mounting pin holes with solder. Just use enough solder to tack the pin to the PCB.

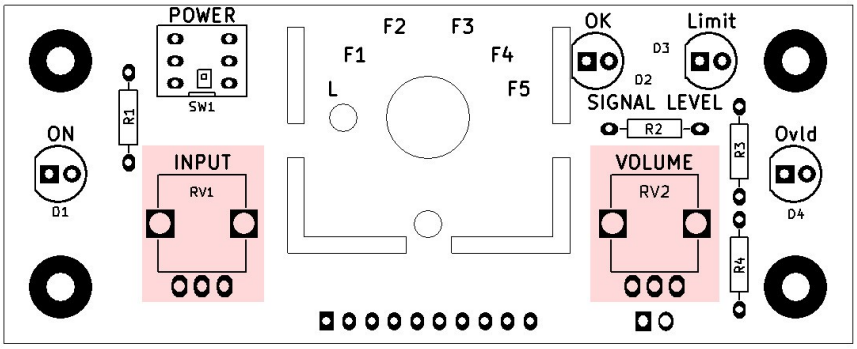

©2014 kc9on

CALF – CW Audio Limiter Filter
Assembly Instructions

6. Install the following LEDs. The flat side of the led (short lead) goes into the square hole. For chassis mounting, temporairly use a .375" standoff to help adjust the LED off the board. If using the supplied LED bezels as part of chassis mounting you may need to move the LEDs closer to .325" spacing, depending on thickness of the chassis.
   - ( ) D1 Green
   - ( ) D2 Green
   - ( ) D3 Yellow
   - ( ) D4 Red

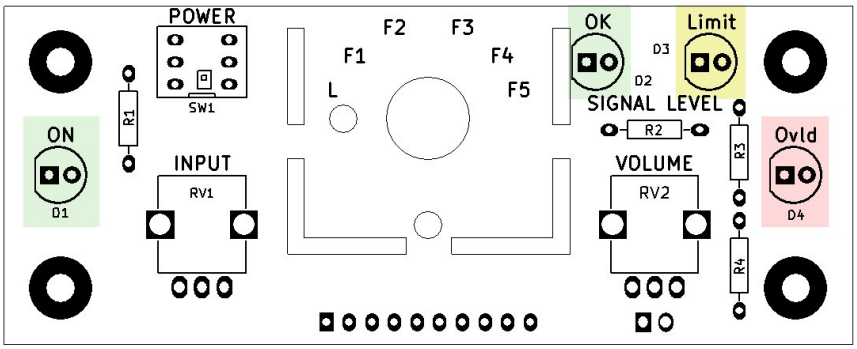

Example of using a standoff to temporairly space the LEDs off the board for soldering. Masking tape was used to hold the spacer in place. Don't forget to remove the spacer when soldered!!

7. Testing - Check the following on header P1 with a DMM:
   - ( ) Pin 1 [Square pin] to Pin 2: 0 Ohms when Power button is on (IN), infinite when off (OUT)
   - ( ) Pin 3 to Gnd [pin 10]: 10K ohms
   - ( ) Pin 3 to Pin 6: 0 Ohms when power button is off (OUT), Infinite when on (IN).
   - ( ) Pin 4 to Gnd: Varies from 0 to 10K as the LIMIT pot is turned.
   - ( ) Pin 5 to Pin 6: Infinite Ohms when Power button is off (OUT), 0 Ohms when on (IN).

This completes the assembly of the front panel.

©2014 kc9on

CALF – CW Audio Limiter Filter
Assembly Instructions

Chassis Jacks, plugs, and switch preparation

This step is required is you are using the connectors supplied with the kit. However, if you wish to use your own jacks/plugs to connect to the 3CPO board, please read this step to help understand the connections to and from the board. Some items below, such as connecting power to the board, will be used as part of testing the circuits.

8. Wire Preparation
   ( ) Cut 4 pieces of black wire to 3" length.
   ( ) Cut 2 pieces of blue wire to 3" in length.
   ( ) Cut 2 pieces of red wire to 3" in length.
   ( ) Cut 2 pieces of white wire to 3" in length.
   ( ) Locate the 3" pieces of brown,green, and yellow wires, no cutting is required for these.
   ( ) On each piece of wire strip 1/8" from one end and tin.
9. Power jack preparation:
   ( ) Solder the tinned 1/8" end of the red wire to the positive lead of the 2.1mm chassis power jack. The positive lead is at a right angle to the other 2 pins.
   ( ) Solder the tinned 1/8" end of a black wire to the negative lead of the 2.1mm chassis power jack. The negative lead is the opposite pin on the back of the jack. The center pin is not used.
   ( ) On the free ends of the red and black wire, strip 1/4" and tin.
   ( ) A 2.1mm plug is supplied for connection to your power source. Connect the tip (center pin) to the positive power source lead and the shield to the negative.
   When requested in future steps connect the free ends of the power jack to terminal block P107, Red to + and Black to -. Use the small screws at the top of the terminal block to secure the wires in place. The supplied 2.1mm plug can be used to connect into the jack. Do not connect the power jack at this time.
10. Audio input jack preparation:
   Tip: Connect the mono jack into the plug and use an ohm meter to help find the tip and shield connections.
   ( ) Solder the tinned 1/8" end of a black wire to the SHIELD connection on the mono chassis jack. The Sheild connection is the one sticking out on the side.
   ( ) Solder the tinned 1/8" end of a blue wire to the TIP connection on a mono chassis jack. The tip connection is opposite the shield connection. The center connection is not used.
   ( ) On the free ends of the blue and black wire, strip 1/4" and tin.
   Notes:
   a) If desired you may gently bend the shield connector toward the back as seen in the photo. You may also trim the tip wire to match the black wire in length.
   b) A 3.5mm mono plug is supplied for connection to your radio.

   When requested in future steps connect the free ends of the mono jack to P101, Blue (tip) to + and Black (shield) to -. Use the small screws at the top of the terminal block to secure the wires in place.

©2014 kc9on

CALF – CW Audio Limiter Filter
Assembly Instructions

11. Audio output jack preparation:
    ( ) Solder the tinned 1/8" end of a black wire to the SHIELD connection on the mono chassis jack. The Sheild connection is the one sticking out on the side.
    ( ) Solder the tinned 1/8" end of a white wire to the TIP connection on a mono chassis jack. The tip connection is opposite the shield connection. The center connection is not used.
    ( ) On the free ends of the white and black wire, strip 1/4" and tin.
    Notes:
    a) If desired you may gently bend the shield connector toward the back as seen in the photo. You may also trim the yellow tip wire to match the black wire in length
    b) A 3.5mm mono plug is supplied for connection to your speaker or headphones.

    When requested in future steps connect the free ends of the mono jack to P102, White (tip) to + and Black (shield) to -. Use the small screws at the top of the terminal block to secure the wires in place.
12. Switch Preparation – Use the switch diagram below to locate the switch lug positions. Solder the tinned 1/8" end of a wire to the terminal listed below:
    TIP: to find the correct terminals on the switch place the switch fully counterclockwise position then use an ohm meter to confirm the center and switch position 1.
    ( ) black wire to the B terminal
    ( ) blue wire to the B1 terminal
    ( ) green wire to the B2 terminal
    ( ) red wire to the B3 terminal
    ( ) white wire to the B4 terminal
    ( ) yellow wire to the B5 terminal
    ( ) brown wire to the B6 terminal

    ( ) Strip 1/8" off the free end of each wire and tightly twist.
    Note: The "A" portion of the switch is available for your own modifications.

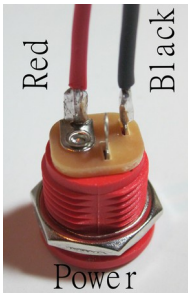

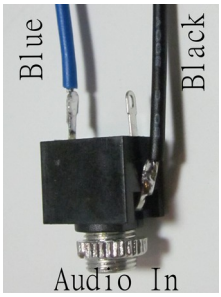

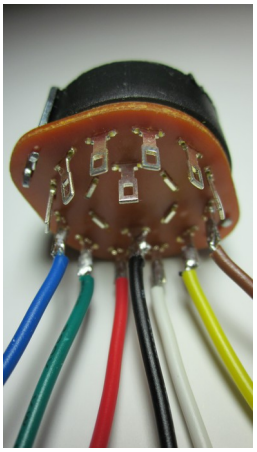

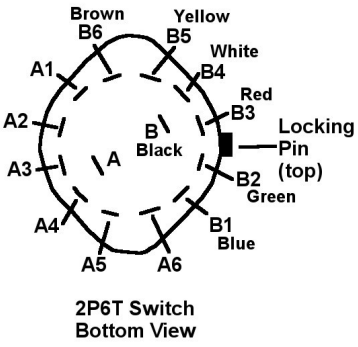

©2014 kc9on

CALF – CW Audio Limiter Filter
Assembly Instructions

Main Board Assembly
(Power Supply)

13. Install the following components:

( ) P105	10 pin right angle female header	
( ) P107	2 pin terminal block	Note: position the terminal block so the wire entrances are away from the board.
( ) D101	1N4007 diode	"Black" Diode. Match the band on the diode to the silkscreen.
( ) R102	22K 1% Resistor	Red-Red-Black-Red-Brown
( ) R103	22K 1% Resistor	Red-Red-Black-Red-Brown
( ) C102	220uF electrolytic capacitors	**Check polarity when installing.**
( ) C106	100uF electrolytic capacitor	**Check polarity when installing.**
( ) C107	10uF electrolytic capacitor	**Check polarity when installing.**
( ) C108	10uF electrolytic capacitor	**Check polarity when installing.**
( ) U101	78L09 regulator IC	

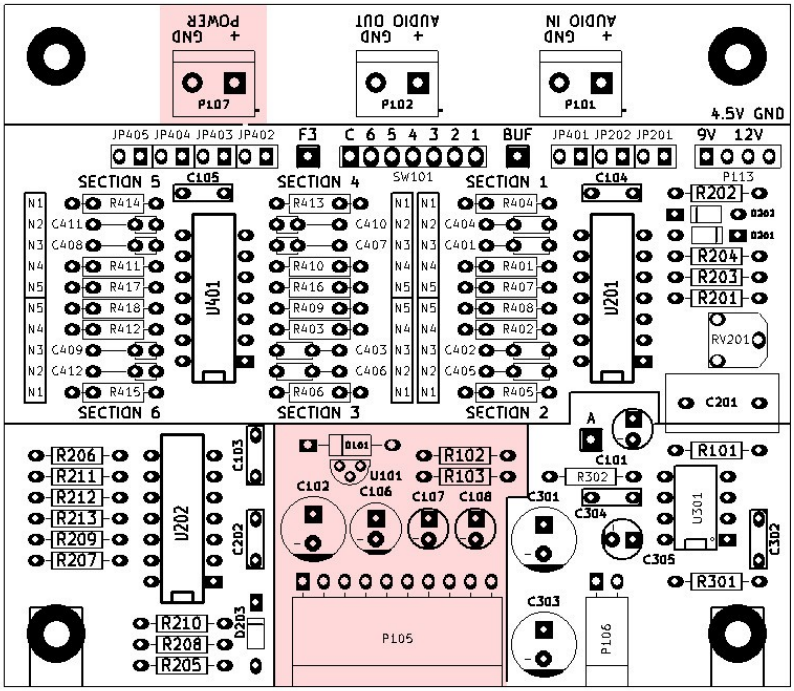

©2014 kc9on

CALF – CW Audio Limiter Filter
Assembly Instructions

14. Power Supply Testing:

TIP: The terminal blocks are shipped with the screws fully tightened. You will need to loosen the screws in order to place the wires into the terminal block holes. Then snug the screws down to keep the wires in.

( ) Connect the front panel P101 to the main board P105.
( ) Connect the power jack to P107 as shown in the chassis jack preparation step.
( ) Using a DMM check the resistance across P107 with SW101 in both the ON AND OFF positions. There should be infinite resistance in the OFF position and a very high resistance, >100K to infinit ohms in the ON position.
( ) Connect your 12-15V power source to the power jack.
( ) Press SW101 to turn the power on. The Green ON LED should be lit.
( ) With a DMM measure the voltage at the following places using ground as the reference:

( ) 9V at pin 4 of U201
( ) 4.5V at pin 3 of U201
( ) Measure your power supply voltage at P107: _____
( ) Measure the voltage at pin 6 of U301. This should be about .6V less than the power supply voltage at P107.
( ) Switch off SW1, Disconnect the power and the power jack, and separate the front panel from the main PCB.

TIP: Loosen the screws from the terminal blocks and remove the wires. Once removed snug the screws back down so they do not fall out.

Main Board Assembly
(Audio Amplifier)

15. Install the following components:

( ) R101	100K ohm 1% resistor	Brown-Black-Black-Orange-Brown
( ) R301	10K ohm 1% resistor	Brown-Black-Black-Red-Brown
( ) R302	10 ohm resistor	Brown-Black-Black-Gold
( ) C302	.047uF (47nF) ceramic capacitor	473
( ) C304	.047uF (47nF) ceramic capacitor	473
( ) C301	220uF electrolytic capacitor	Note Polarity
( ) C303	220uF electrolytic capacitor	Note Polarity
( ) C101	10uF electrolytic capacitor	Note Polarity
( ) C305	10uF electrolytic capacitor	Note Polarity
( ) U301	8 pin IC Socket	Align notch on socket to notch on silkscreen

©2014 kc9on

CALF – CW Audio Limiter Filter
Assembly Instructions

( ) press LM386 IC into socket U301	Align the notch of the IC to the notch on the socket. Some IC's do not have a notch. In this case the dot represents pin 1. Align the dot to the square pad on the PCB. You may need to slightly bend the legs to fit it in the socket.
( ) P106 2 pin right angle female header	
( ) P102 2 pin terminal block	Note: position the terminal block so the wire entrances are away from the board.
( ) Pin A 1 pin header	Optional, for experimenting

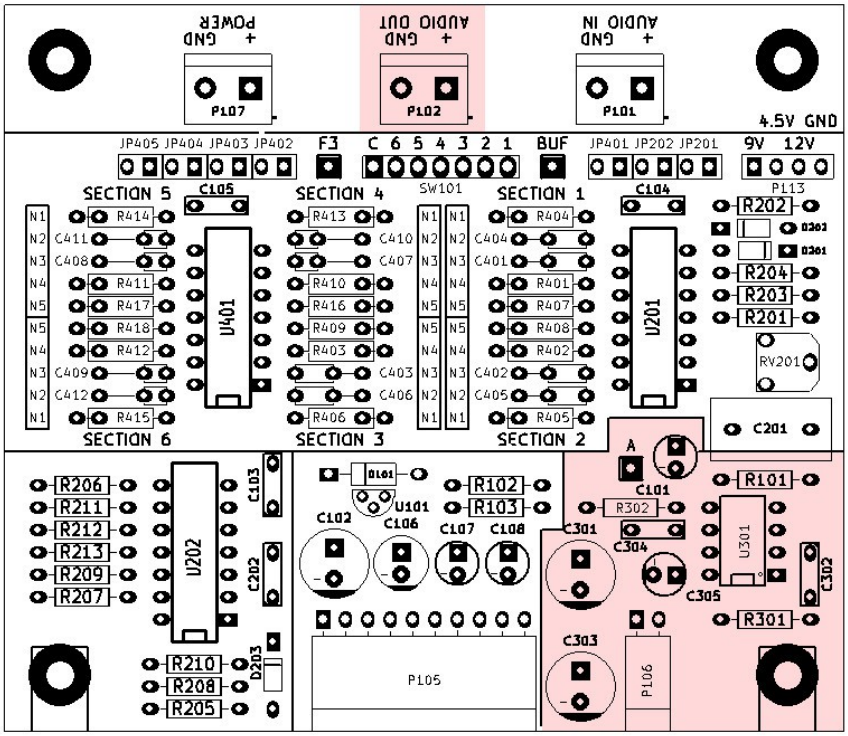

Main Board Assembly
(LED Detector/Driver)

16. Install the following components:

( ) C103	.01uF (10nF) ceramic capacitor	103
( ) C202	.1uF (100nF) ceramic capacitor	104
( ) D203	1N4148 diode	"Small Glass" Diode. Observe band
( ) R205	2K ohm 1% resistor	Red-Black-Black-Brown-Brown

©2014 kc9on

CALF – CW Audio Limiter Filter
Assembly Instructions

( ) R208	220K Resistor	Red-Red-Yellow-Gold
( ) R210	10K ohm 1% resistor	Brown-Black-Black-Red-Brown
( ) R206	4.7K ohm resistor	Yellow-Violet-Red-Gold
( ) R211	1.8K ohm resistor	Brown-Grey-Red-Gold
( ) R212	1.2K ohm resistor	Brown-Red-Red-Gold
( ) R213	1.8K ohm resistor	Brown-Grey-Red-Gold
( ) R209	15K ohm resistor	Brown-Green-Orange-Gold
( ) R207	1K ohm resistor	Brown-Black-Red-Gold
( ) U202	14 pin IC socket	Align notch on socket to notch on silkscreen
( ) U202	LM324 IC	Align notch on IC to notch on socket

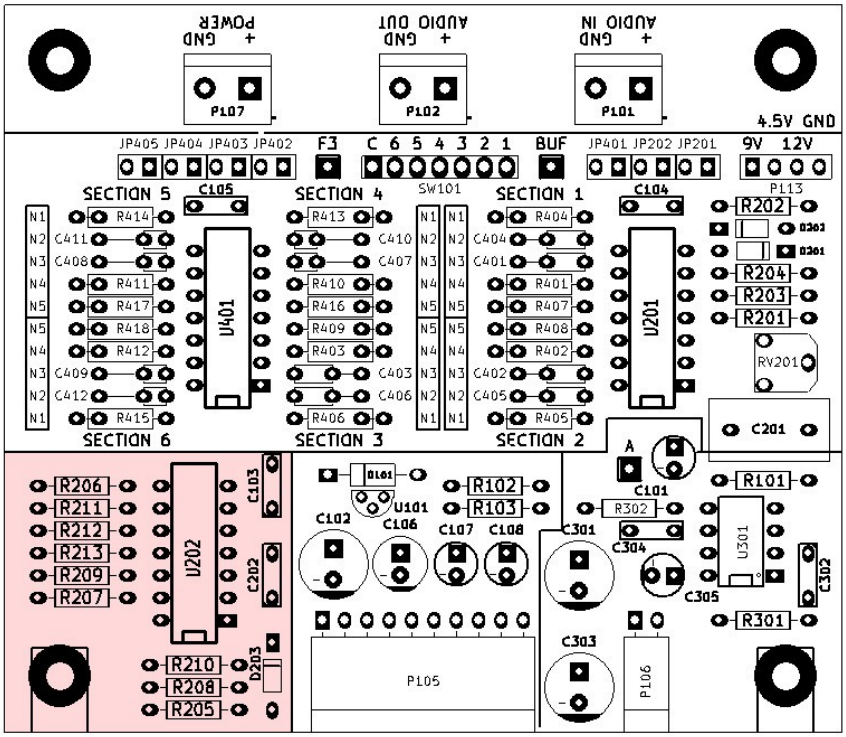

©2014 kc9on

CALF – CW Audio Limiter Filter
Assembly Instructions

a) Main Board Assembly
(Input Buffer Amp / Limiter)

17. Install the following components:

( ) R202	1K ohm resistor	Brown-Black-Red-Gold
( ) D202	1N4148 diode	"Small Glass" Diode Observe polarity of bands!
( ) D201	1N4148 diode	"Small Glass" Diode Observe polarity of bands! Hint: D201 is installed in reverse of D202.
( ) R204	1K ohm resistor	Brown-Black-Red-Gold
( ) R203	10K ohm 1% resistor	Brown-Black-Black-Red-Brown
( ) R201	2K ohm 1% resistor	Red-Black-Black-Brown-Brown
( ) RV201	250K ohm trimmer	254
( ) C201	.47uF (470nF) Mylar capacitor	474
( ) C104	.01uF (10nF) ceramic capacitor	103
( ) C105	.01uF (10nF) ceramic capacitor	103
( ) U201	14 pin IC socket	Align notch on socket to notch on silkscreen
( ) U401	14 pin IC socket	See U201 above
( ) U201	TL084 IC	Align notch on IC to notch on socket
( ) U401	TL084 IC	See U201 above
( ) P101	2 pin Terminal block	Note: position the terminal block so the wire entrances are away from the board.

( ) Install the following 2 pin headers:
JP201, JP202, JP401, JP402, JP403, JP404, JP405
These may be installed individually or in groups. For example JP201, JP202, and JP401 may be installed as a 6 pin header. Header pins may be shipped together in a breakaway configuration.

( ) Install a 2 pin shorting block over each of the above jumpers.
NOTE: The audio limiter/filter will not operate correctly without the jumpers installed.

©2014 kc9on

CALF – CW Audio Limiter Filter
Assembly Instructions

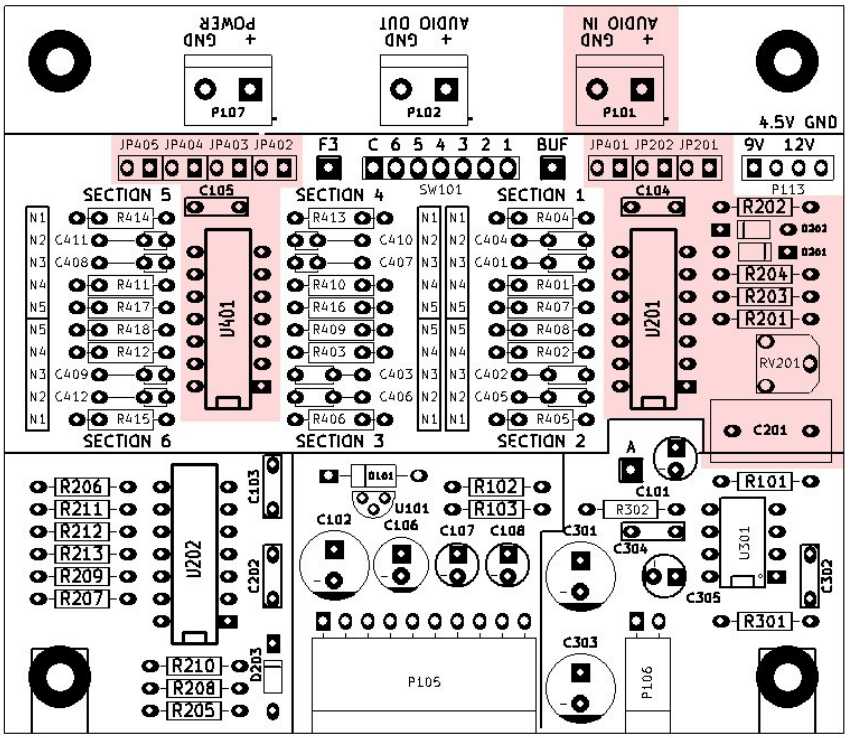

18. Buffer, Limiter, LED, and Amplifier testing:
    ( ) Connect the front panel P101 to the main board J101.
    ( ) With a DMM measure across the Audio Input contacts (P101). This should be approximately 10K.
    ( ) Connect the power jack to P104 as shown in the chassis jack preparation step.
    ( ) Connect the audio input jack to P101 as shown in the chassis jack preparation step.
    ( ) Connect the audio output jack to P102 as shown in the chassis jack preparation step.
    ( ) Connect a speaker or headphones to the audio output jack/plug.
    ( ) Connect a receiver or audio signal generator to the audio input jack/plug. Optimally a signal generator set to 700Hz sine wave at 500mV along with an oscilloscope can be used, however, a receiver set to a constant tone or AM station such as WWV can also be used for this test.
    ( ) Set the INPUT and VOLUME controls on the front panel fully couter clockwise.
    ( ) Set RV1 to mid-position.
    ( ) Connect your 12-15V power source to the power jack/plug.
    ( ) Press SW1 to turn the power on. The Green ON LED should be lit.
    ( ) Turn the "INPUT" limit potentiometer, The OK, LIMIT, and OVLD LED's should each come on as the potentiometer is turned toward maximum. If the unit is too sensitive (All LED's come on with little turning of the INPUT potentiometer, turn RV201 counter-clockwise to reduce the sensitivity. If all of the LED's are not on when the INPUT potentiometer is fully clockwise then turn RV201 clockwise until all LED's are on.

©2014 kc9on

CALF – CW Audio Limiter Filter
Assembly Instructions

Oscilloscope and generator testing – You can observe the limiter in action by placing a test probe on the AUDIO IN connection and a second probe on SW101 pin #1. As the LIMIT potentiometer is adjusted you should see the following at SW101-1:

Green LED turns on with a 400mVp-p signal.
Yellow LED turns on with a 1Vp-p signal with slightly flattened peak.
Red LED turns on a 1.2Vp-p signal with an almost square shape.
As the limiter is turned past the Red LED setting, the wave will become more square with a maximum amplitude of about 1.25Vp-p.

( ) Using a small piece of scrap wire, carefully and temporairly jumper (do not solder!) SW101 from points C to 1. You should be able to hear the signal when turning the volume potentiometer up. Remove the jumper.

( ) Switch off SW1, Disconnect the power and the power jack along with the audio input and output jacks, and separate the front panel from the main PCB.

Main Board Assembly
(Filter Stages)

19. **DECISION:** To experiment or not?
If you wish to use the filter with the provided R/C values and not make experimental changes, please skip this step and proceed to the next step to solder the R/C filter components into the board.

Three 20 pin IC sockets are included if you wish to experiment with different types of filters (see "Experimenting with Filters" section of this manual). These sockets may be soldered in first and the remaining R/C values can be interchanged as needed. To avoid loosing parts, it is recommended to proceed to the final assembly steps then return back and insert the filter stage R/C values.

Header pins have also been provided for P113, BUF, and F3.

©2014 kc9on

CALF – CW Audio Limiter Filter
Assembly Instructions

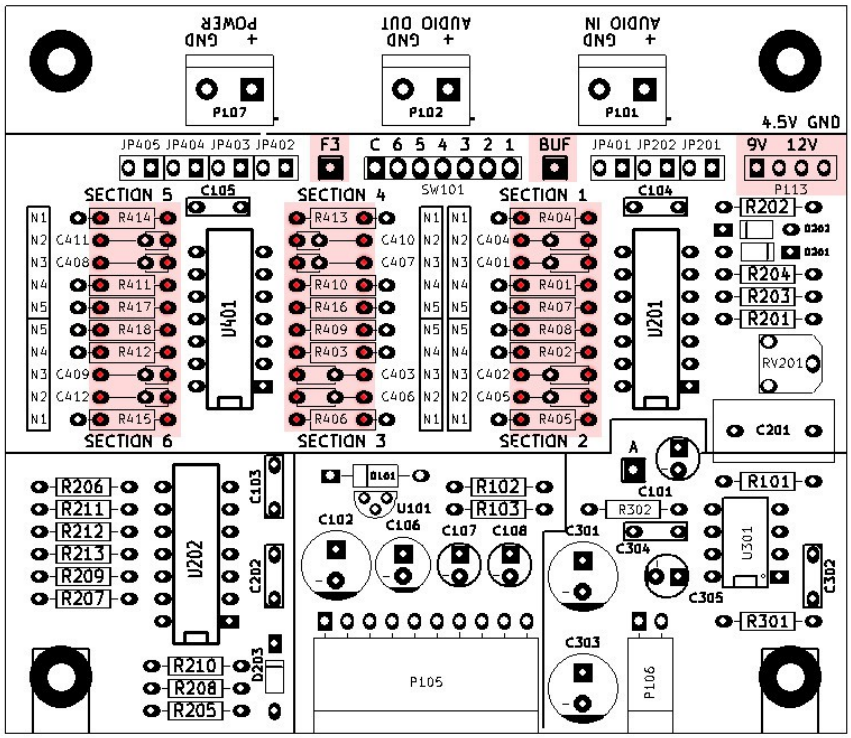

20. Install the following components – R/C Values section 1 and 2:

Section 1

( )	N1	R404	22K 1% resistor	Red-Red-Black-Red-Brown
( )	N2	C404	10nF .01uF 5% mylar capacitor	103 Use the 2 holes <u>closest to the IC</u>
( )	N3	C401	10nF .01uF 5% mylar capacitor	103 Use the 2 holes <u>closest to the IC</u>
( )	N4	R401	47K 1% resistor	Yellow-Violet-Black-Red-Brown
( )	N5	R407	22K 1% resistor	Red-Red-Black-Red-Brown

Section 2

( )	N5	R408	10K 1% resistor	Brown-Black-Black-Red-Brown
( )	N4	R402	68K 1% resistor	Blue-Grey-Black-Red-Brown
( )	N3	C402	10nF .01uF 5% mylar capacitor	103 Use the 2 holes <u>closest to the IC</u>
( )	N2	C405	10nF .01uF 5% mylar capacitor	103 Use the 2 holes <u>closest to the IC</u>
( )	N1	R405	33K 1% resistor	Orange-Orange-Black-Red-Brown

©2014 kc9on

CALF – CW Audio Limiter Filter
Assembly Instructions

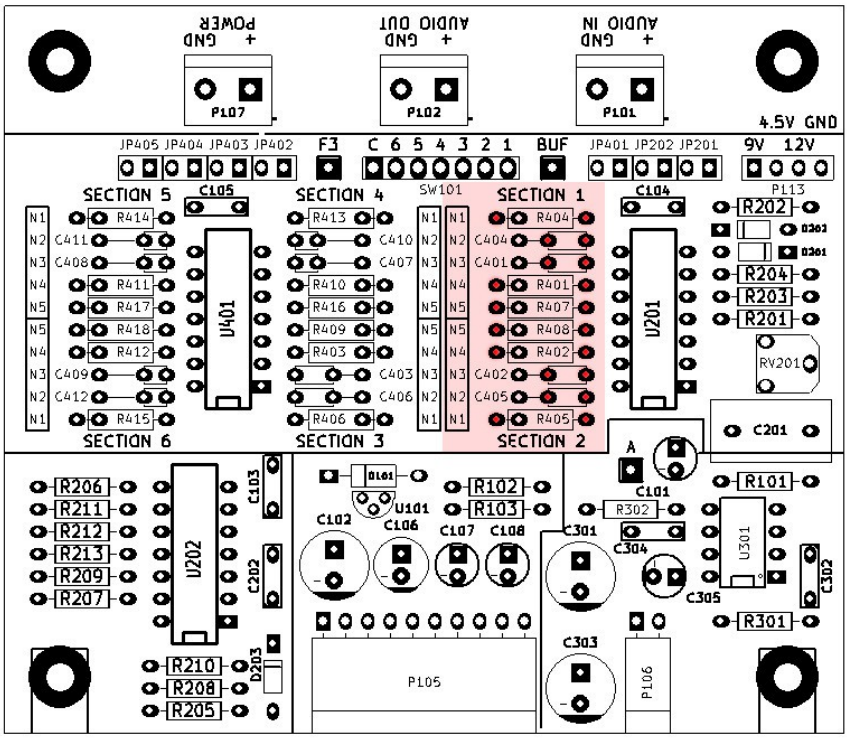

21. Install the following components – R/C Values section 3 and 4:

Section 4

( )	N1	R413	27K 1% resistor	Red-Violet-Black-Red-Brown
( )	N2	C410	22nF .022uF 5% mylar capacitor	223 Use the <u>first and last holes</u>
( )	N3	C407	22nF .022uF 5% mylar capacitor	223 Use the <u>first and last holes</u>
( )	N4	R410	56K 1% resistor	Green-Blue-Black-Red-Brown
( )	N5	R416	2K 1% resistor	Red-Black-Black-Brown-Brown

Section 3

( )	N5	R409	5.6K 1% resistor	Green-Blue-Black-Brown-Brown
( )	N4	R403	100K 1% resistor	Brown-Black-Black-Orange-Brown
( )	N3	C403	10nF .01uF 5% mylar capacitor	103 Use the 2 holes <u>closest to the IC</u>
( )	N2	C406	10nF .01uF 5% mylar capacitor	103 Use the 2 holes <u>closest to the IC</u>
( )	N1	R406	47K 1% resistor	Yellow-Violet-Black-Red-Brown

©2014 kc9on

CALF – CW Audio Limiter Filter
Assembly Instructions

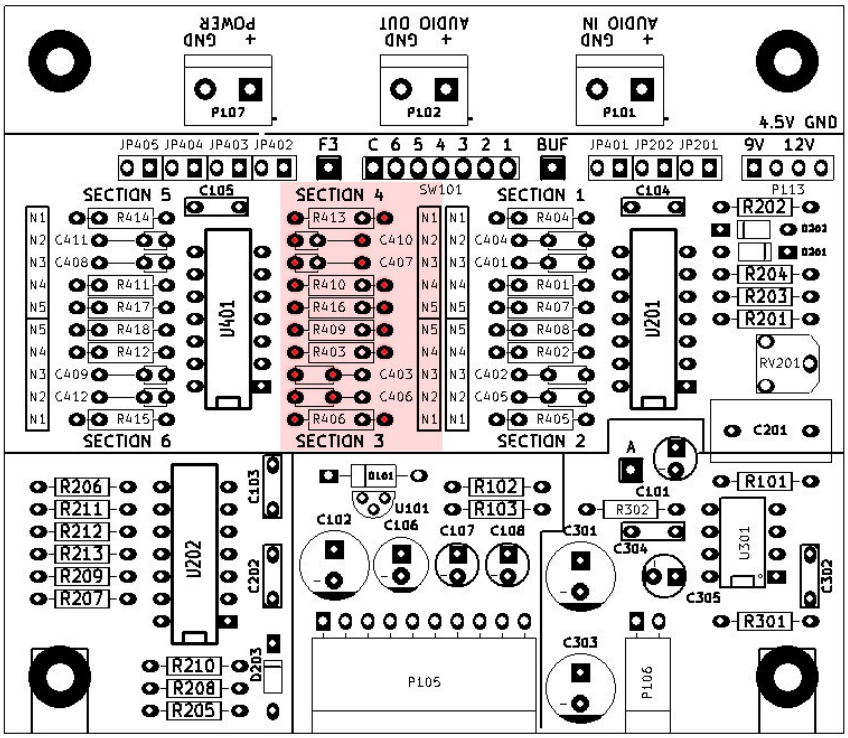

22. Install the following components – R/C Values section 5 and 6:

Section 5

( )	N1	R414	43K 1% resistor	Yellow-Orange-Black-Red-Brown
( )	N2	C411	22nF .022uF 5% mylar capacitor	223 Use the <u>first and last holes</u>
( )	N3	C408	22nF .022uF 5% mylar capacitor	223 Use the <u>first and last holes</u>
( )	N4	R411	82K 1% resistor	Grey-Red-Black-Red-Brown
( )	N5	R417	1.3K 1% resistor	Brown-Orange-Black-Brown-Brown

Section 6

( )	N5	R418	910 ohm 1% resistor	White-Brown-Black-Black-Brown
( )	N4	R412	120K 1% resistor	Brown-Red-Black-Orange-Brown
( )	N3	C409	22nF .022uF 5% mylar capacitor	223 Use the <u>first and last holes</u>
( )	N2	C412	22nF .022uF 5% mylar capacitor	223 Use the <u>first and last holes</u>
( )	N1	R415	56K 1% resistor	Green-Blue-Black-Red-Brown

©2014 kc9on

CALF – CW Audio Limiter Filter
Assembly Instructions

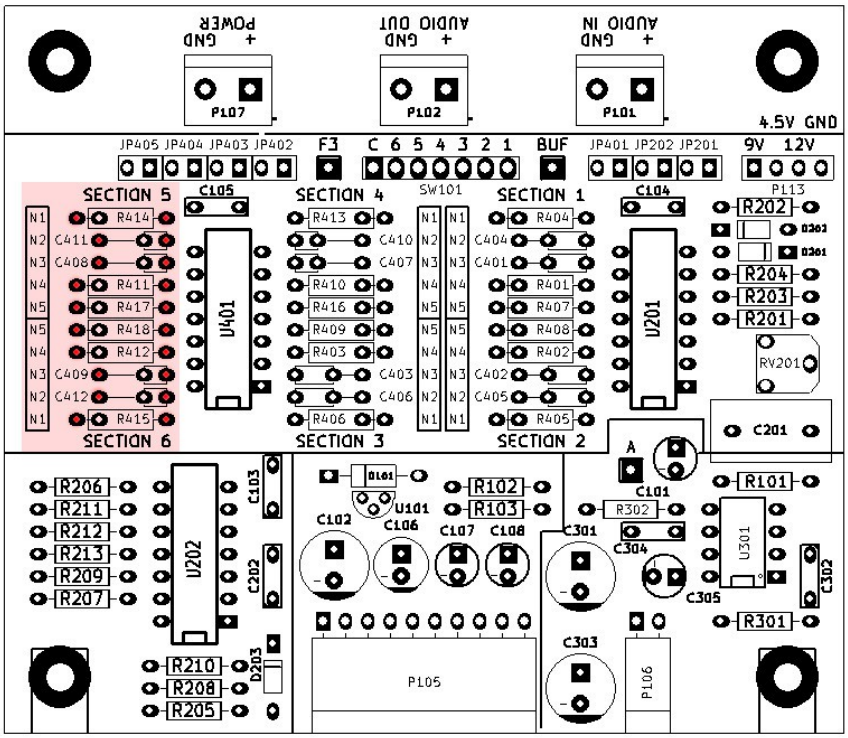

Main Board Assembly
(Final Assembly)

23. Rotary Switch installation & Final Assembly

Note: The screws provided are slightly long to accomodate optional assembly into a chassis of your choice. You may wish to shorten these with bolt cutters and omit the spacers as needed.

( ) Slip a **.250" (short)** spacer over a 4-40 screw. Slide the assembly from the bottom side of the main PCB into the mounting hole hear the AUDIO IN terminal block. Tighten with a 4-40 lock washer and nut. Do the same with the mounting hole hear the POWER terminal block.

() Slip a **.375" (long)** spacer over a 4-40 screw and slide the assembly from the front side of the FRONT PCB near the power switch. Tighten with a 4-40 lock washer and nut. apply to the assembly. Do the same with the mounting hole near the LIMIT LED.

( ) Slip a lock washer then a .250" spacer over a 4-40 screw. Slide the assembly from the bottom side of the MAIN PCB into the mounting hole hear R301. Align the long side of an L bracket over this hole and the front of the PCB. Screw the L brack down to the board but do not tighten. Do the same with the mounting hole near R207.

Note: The long and short sides of the L brack are hard to see. If you observe bowing on the front panel when mounting the front panel the brackets are backwards.

©2014 kc9on

CALF – CW Audio Limiter Filter
Assembly Instructions

( ) Connect the front panel P10 & P102 to the main board P105 & P106.

( ) Slip a lock washer then a .375" (3/8") spacer over a 4-40 screw. Place the screw through the front panel mounting hole below the ON LED, align the L-bracket and tighten. Tighten the adjacent screw on the main board. Do with same with the mounting hole below the OVLD LED.

( ) If the switch area has not been removed from the front panel PCB, mount the 6PDT rotary switch in the hole provided using the supplied washer and nut. The locking tab of the switch aligns with the hole toward the bottom of the board.
( ) Solder the switch wires from the switch to the main PB as follows:
- ( ) Blue wire from switch A1 contact to SW101 pin 1 on the PCB
- ( ) Green wire from switch A2 contact to SW101 pin 2 on the PCB
- ( ) Red wire from switch A3 contact to SW101 pin 3 on the PCB
- ( ) White wire from switch A4 contact to SW101 pin 4 on the PCB
- ( ) Yellow wire from switch A5 contact to SW101 pin 5 on the PCB
- ( ) Brown wire from switch A6 contact to SW101 pin 6 on the PCB
- ( ) Black wire from switch CENTER (A) to SW101 pin C on the PCB

( ) Use the 2 cable ties to harness the wires going from the PCB to the switch.

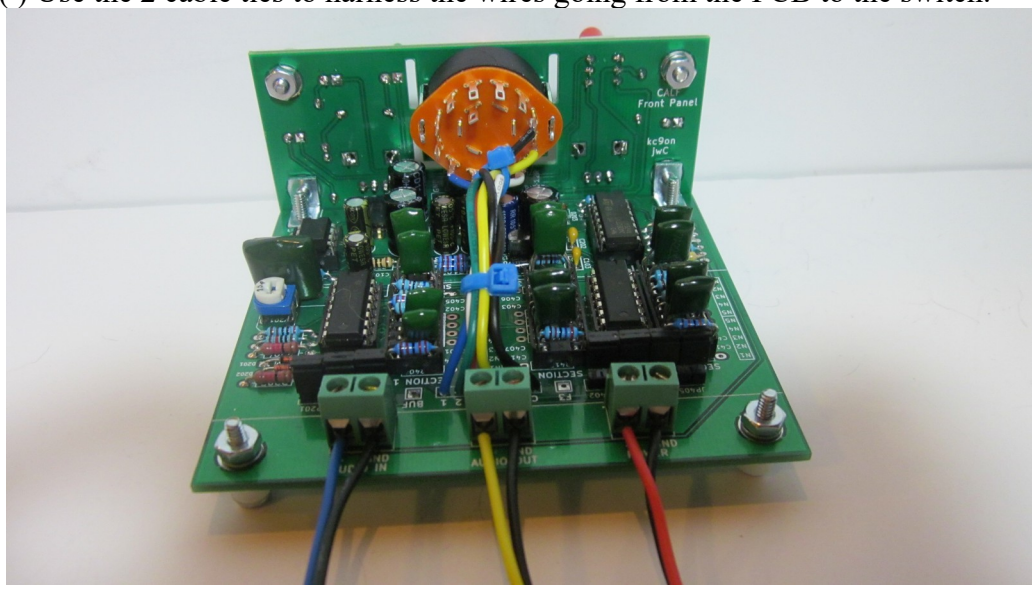

Populated sockets and wire harness

( ) Slide the switch cap over the power switch.
( ) Slide the rotary switch knob over the rotary switch and tighten.
( ) Connect the audio input jack to terminal block P101.
( ) Connect the speaker jack to terminal block P102.
( ) Connect the power jack to terminal block P107.
( ) Adjust trimmer RV201 to mid position.

 ©2014 kc9on

CALF – CW Audio Limiter Filter
Assembly Instructions

24. ( ) Optionally mount in a chassis of your choice. Note: We have provided LED mounting bezels if you desire to use them.

Congradulations! Your audio limiter/filter is now ready to use!

©2014 kc9on

CALF – CW Audio Limiter Filter
Assembly Instructions

Operation:

( ) Adjust front panel INPUT and VOLUME potentiometers to fully counter-clockwise.
( ) Connect power, radio (or audio input), and speaker/headphones.
( ) Place the front panel rotary switch in the L(limit) position.
( ) Power the unit on.
( ) Initial Adjustment – Specific to your selected radio.

( ) Turn the radio on and tune to a station. Keep the volume on the radio to a low level to prevent overload. A voice station (such as WWV) works the best for this adjustment but even a CW signal will work.

( ) Set the audio INPUT potentiometer on the front panel to mid-position. Adjust the audio output VOLUME potentiometer to a comfortable level.

( ) Adjust the buffer amp trimmer RV101 until the green LED lights fully and the yellow LED barely flashes. In most cases RV101 will be fine in the center position and the radio volume control can be used to make this adjustment. However, some commercial radios may supply too much volume or QRP equipment too little, in these cases RV101 may be used to amplify or attenuate the signal.

( ) Regular operation - Adjust the audio INPUT pot until the green LED is lit and the yellow led barely flashes.

Weak Signal Tip – You may find a weak, barely audible, signal slightly better to receive by increasing the audio INPUT until RED flashes a little. This will sound noisey, but weak signals can be copied better. The Filter Section will pull out the 700 CW signal !

( ) Adjust the audio output VOLUME control to a comfortable listening level. NEVER make your signal too loud for your ears!!
( ) Select the various filter settings on the rotary switch as desired.

Experimenting with Filters

This board has been designed for experimenting with different types of inverting multiple feedback active filters when IC sockets are used in the filter R/C values area. Schematics for Low, High, and Bandpass filter examples are shown in the appendix of this manual.

( ) Choose the type of filter – High, Low, or Band pass

( ) Calculate your R/C values – Highly recommended are the ARRL handbook and TI's FilterPro software. Note: The ARRL handbook uses NON-inverting low and high pass filter examples which use different calculations. However, the Band-pass filter is inverting. Better models can be found at http://K7MEM.com and http://sim.okawa-denshi.jp/en.

( ) Place your R/C values into the desired filter section using the "N1-5" values shown in the the example schematic. For example if you wish to place a 1KHz low pass filter in the first section:

N1	10K resistor	(R404)
N2	5.6K resistor	(C404)
N3	10K resistor	(C401)
N4	10nF .01uF capacitor	(R401)
N5	27nF .027uF capacitor	(R407)

©2014 kc9on

CALF – CW Audio Limiter Filter
Assembly Instructions

The filters can also be re-arranged or other circuitry may be added in between the stages using the following jumper blocks:

Jumper	Pin 1 (Square)	Pin 2 (Oval)
JP201	Input to Limiter	Output from Buffer Amp
JP202	Output from Limiter	Input to Filter #1
JP401	Output from Filter #1	Input to Filter #2
JP402	Output from Filter #2	Input to Filter #3
JP403	Output from Filter #3	Input to Filter #4
JP404	Output from Filter #4	Input to Filter #5
JP405	Output from Filter #5	Input to Filter #6

There are 2 additional solder pads, BUF and F3 which can be used as additional switch positions. BUF is from the output of the audio input buffer OP AMP. F3 is from the 3rd filter section output.

Circuit Description:

Power Supply – 11-15V is applied to the power jack at P107. U101 provides 9V output to power the filter Op Amp IC's. R102 and R103 create a voltage divider to provide 4.5V to the non-inverting pins of the filter Op Amp sections. The capacitors in the power supply section are used mainly for A/C bypass.
Buffer Amp – Audio input is fed into C201 (a DC blocking capacitor) and then into the input limiter volume control RV101 on the front panel which then feeds into an inverting OP AMP at U201A. RV201 provides an internal gain/attenuation adjustment so that a wide variety of audio input ranges can be used.
Limiter – Audio from the buffer amp is fed into the second section of the TL084 OP AMP and limited to approximately 1.2Vp-p. This normally suppresses, but does not eliminate, a large static crash, such as from lightening. This in turn brings the loud "crash" to the same volume level as a weaker signal.

This limiter is an "instant acting" type. Very simple and very effective.
During Limiting Action, the energy of the "crash" is integrated instantly into the baseband noise level as sub / supra harmonics, creating a momentary muffled sound.

Operating:

(1) When a "Weak" Signal is being worked, then the Audio-Input can be turned up to force

 ©2014 kc9on

Limiting Action, and the Audio-Output turned down to match.
The background noise level is increased but the Filter section will pull out the 700 Hz CW nicely.

(2) When a "Normal" signal is being worked, then the Audio-Input can be turned down to squelch Limiting Action and the Audio-Output turned up to match.

Detector & LED driver – Audio from the buffer amplifier is also tapped off and fed to the input of an LM324 OP AMP at U202A running as a regular inverting amplifier with a gain of 2. The output is then rectified with Diode D203 and filtered to a slow moving DC value using R208 and C202. R209 and R210 form a 3.4V voltage divider to properly bias U202A so that 0VDC is produced at the output of D203 when no input signal is present. The slower moving DC is then fed into the remaining 3 sections of the LM324 which are used as voltage comparators. Each section is offset biased using a voltage divider consisting of R206, R211, R212, and R213. Each LED will turn on as the incoming DC value becomes larger than the divider voltage as follows:

Audio IN JP201	DC input U202-6,9,13	Divider	LED Status
0	0	N/A	All LEDs OFF
375mVp-p	> 1.66V	U202-12 1.66V	Green ON (Good audio Signal Range)
1.6Vp-p	> 2.75V	U202-10 2.75V	Yellow ON (Audio signal limited)
3.4Vp-p	> 4.50V	U202-5 4.50V	RED ON (Audio signal overloading OP AMPs)

Band Pass Filters – There are 6 multiple-feedback band pass filters comprise the remaining 2 sections of U201 as well as all of U401. Each filter section is designed near the center frequency of 700Hz and cascades into the next. The 6 position rotary switch allows selection of 5 points through the filter process ranging from a bandwith of 700Hz down to less than 100Hz. Typical filters settings are as follows:

Switch	3dB Width	dB / Octave
L	None	None
F1	700Hz	5dB
F2	350Hz	13dB
F3	175Hz	35dB
F4	125Hz	41dB
F5	<100Hz	41dB

©2014 kc9on

CALF – CW Audio Limiter Filter
Assembly Instructions

Audio Amplifier – Audio is fed from the rotary switch to C101, a DC blocking capacitor, and R101 to attenuate the incoming voltage level. The signal is then fed to RV102 on the front panel for volume control and into an LM386 audio amplifier IC. R301 and C302 provide additional bass boost. The output of the audio amplifier is sent to C303, a DC blocking capacitor, which in turn drives a small speaker of headphones.

Need a little extra volume? R101 can be reduced down to 22K (not included with kit) which will supply extra volume to an external speaker. You will find the volume control to be more sensitive as R101 is decreased. It is recommended to keep R101 larger than 22K to avoid over driving the LM386 amplifier.

Current Ratings:

Supply Voltage	12.0VDC (11-15V)
Min Current (idle)	32mA
Current – full volume with speaker	70mA
Current - full volume with speaker (w/ R101 modification)	175mA

©2014 kc9on